Fort Wayne
City Utilities
Design Standards
Manual

24" WATERTIGHT STORM CASTING

Created: July 26, 2010 | Revised: June 12, 2014

Scale: N.T.S. | Approved: May 16, 2012

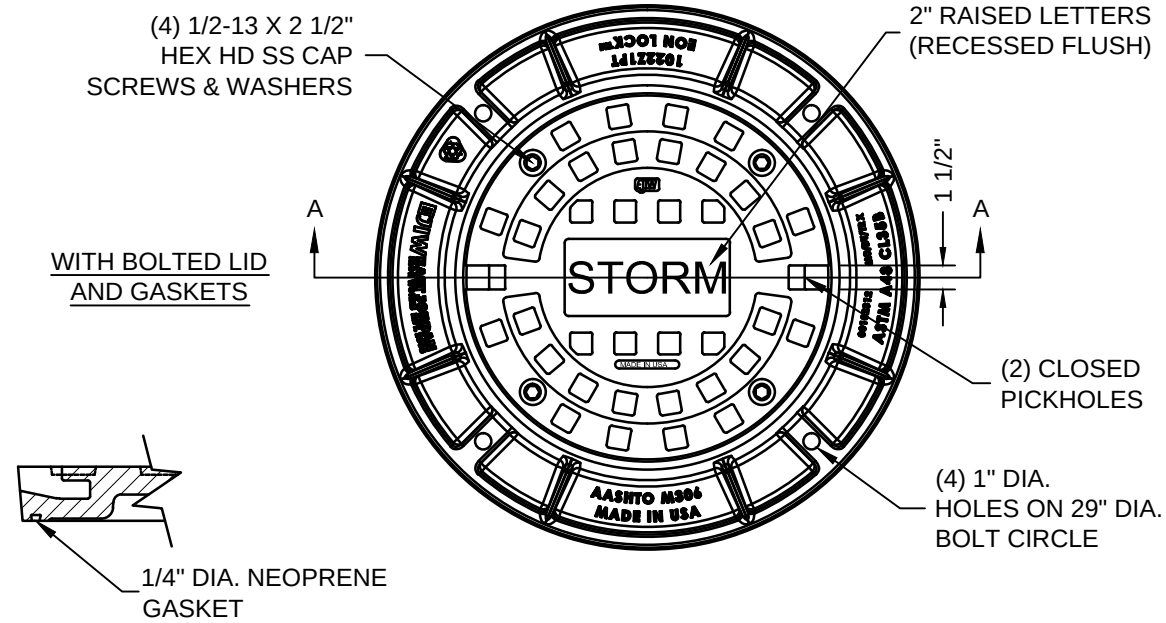

PICKHOLE/SELF-SEAL DETAIL

NOTES:

1. ASTM A48 CLASS 35B
2. ALL BEARING SURFACES TO BE MACHINED

FRAME AND SOLID, BOLTED LID

EAST JORDAN 1022Z1PT W/"STORM" LETTERED, SOLID, BOLTED LID
(STORM APPLICATION ONLY)

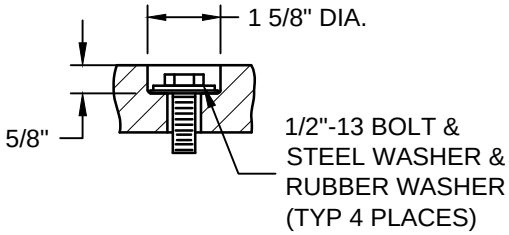

BOLT DETAIL

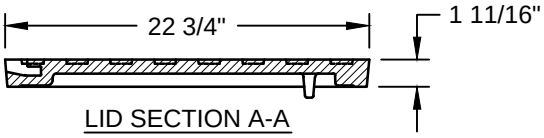

LID SECTION A-A

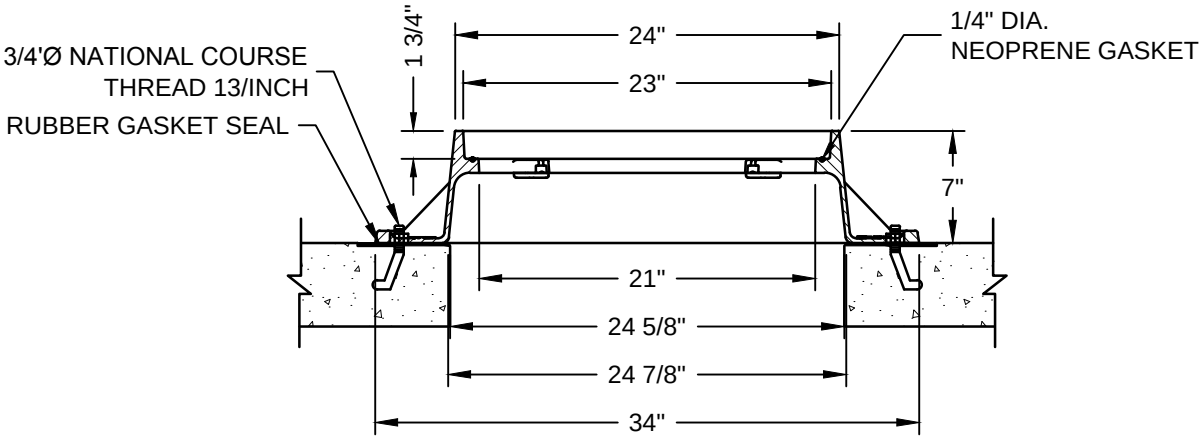

FRAME SECTION A-A