City Utilities
Design Standards
Manual

METAL PIPE END SECTION

Created: February 22, 2012 | Revised: October 14, 2015

Scale: N.T.S. | Approved: May 22, 2015

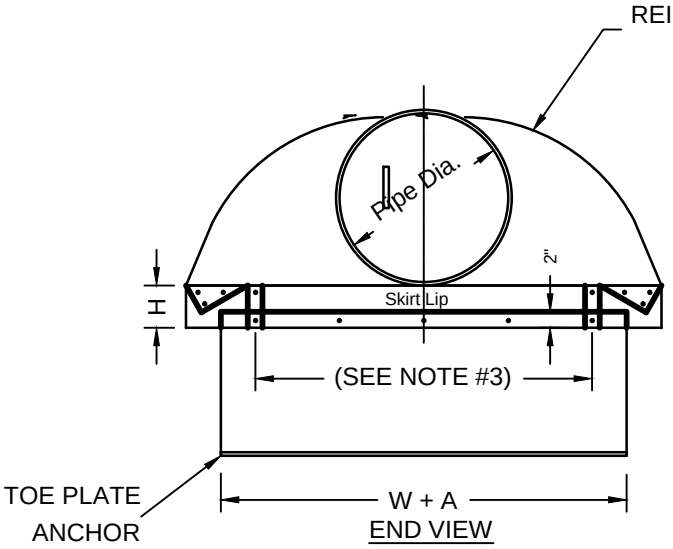

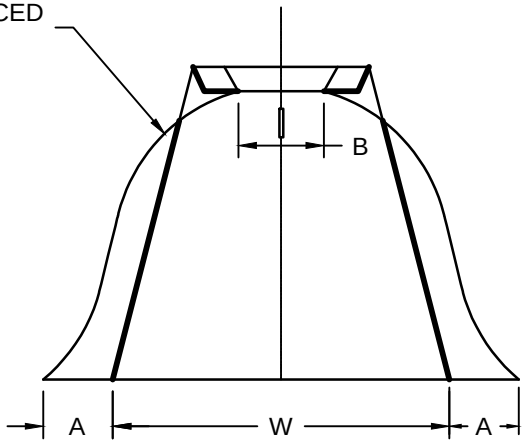

PLAN VIEW

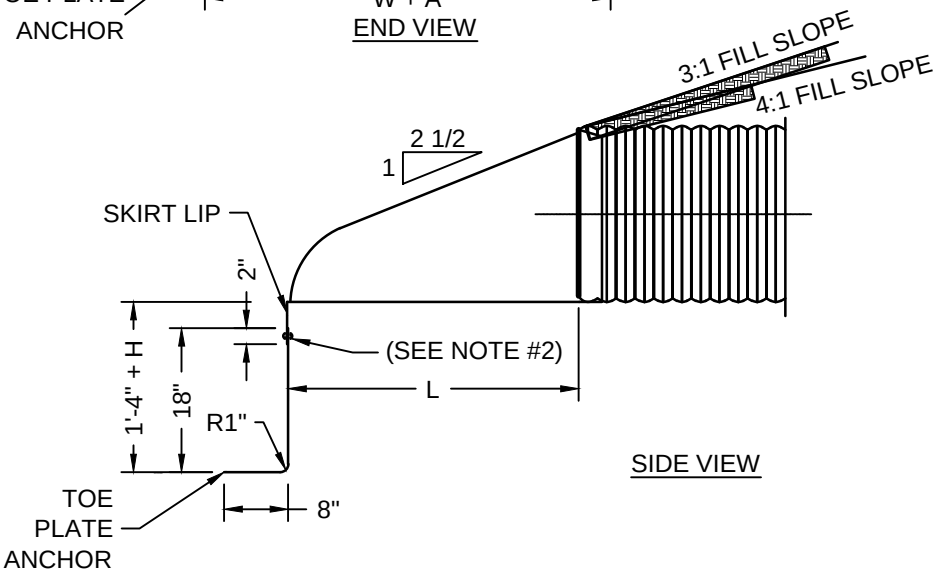

SIDE VIEW

PIPE DIA.	END SECTION THICK. (in.)	DIMENSIONS					APPROX. SLOPE	BODY
		A	B	H	L	W		
		(±1")	(MAX.)	(±1")	(±1 ½")	(±2")		
12	0.064	6	6	6	21	24	2 1/2 : 1	1 Pc.
15	0.064	7	8	6	26	30	2 1/2 : 1	1 Pc.
18	0.064	8	10	6	31	36	2 1/2 : 1	1 Pc.
21	0.064	9	12	6	36	42	2 1/2 : 1	1 Pc.
24	0.064	10	13	6	41	48	2 1/2 : 1	1 Pc.
30	0.079	12	16	8	51	60	2 1/2 : 1	1 Pc.
36	0.079	14	19	9	60	72	2 1/2 : 1	2 Pc.

NOTES:

1. TOE PLATE ANCHOR= 0.138 INCH THICK.
2. CONNECTION BOLTS= 3/8 INCH DIAMETER GALVANIZED.
3. SPACE TOE PLATE AND SKIRT LIP CONNECTION BOLTS 12" CENTER TO CENTER MAX.