City Utilities
Design Standards
Manual

PIPE PLUG AND ABANDON

Created: JULY 16, 2012 Revised: October 23, 2015
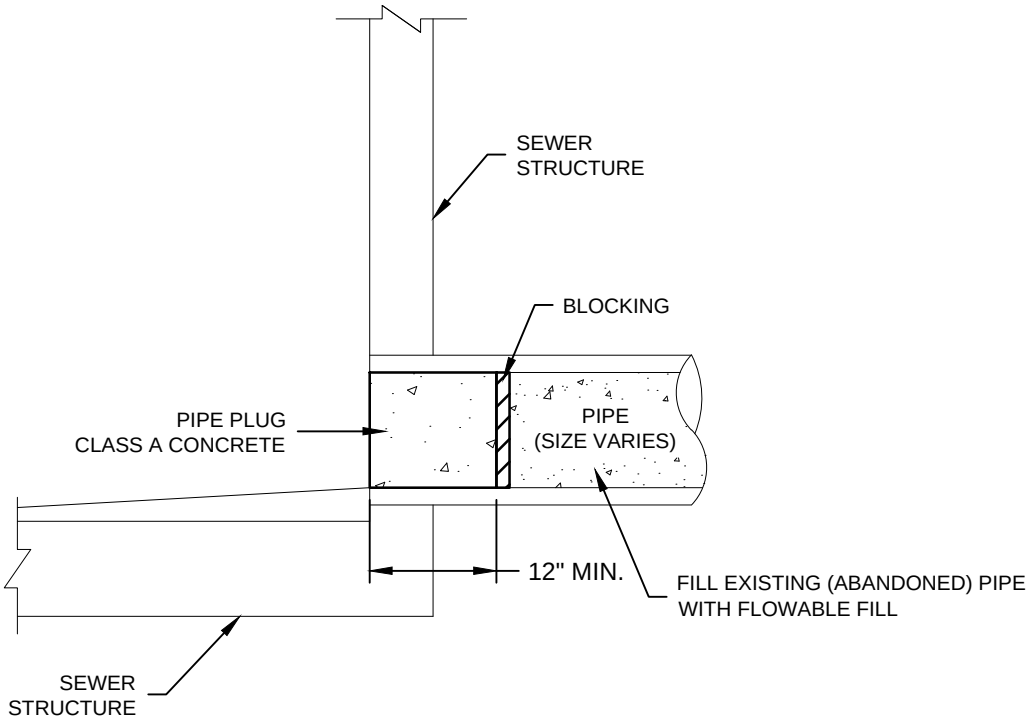
Scale: N.T.S.