City Utilities
Design Standards
Manual

RAIN GARDEN PLANTING DETAILS

Created: December 17, 2012 | Revised: May 22, 2015

Scale: N.T.S. | Approved: May 22, 2015

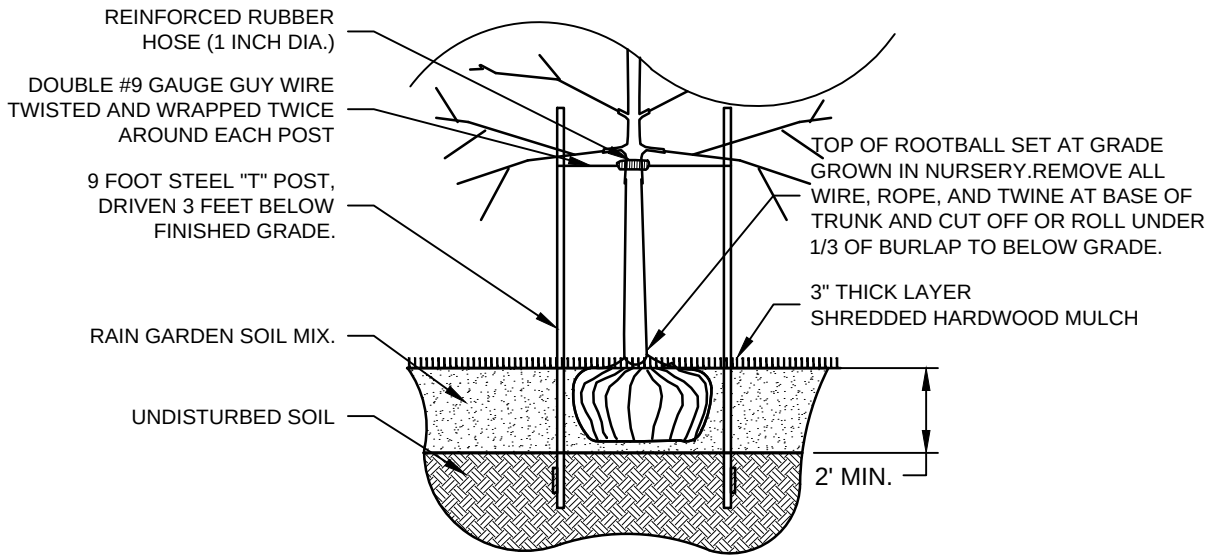

TREE

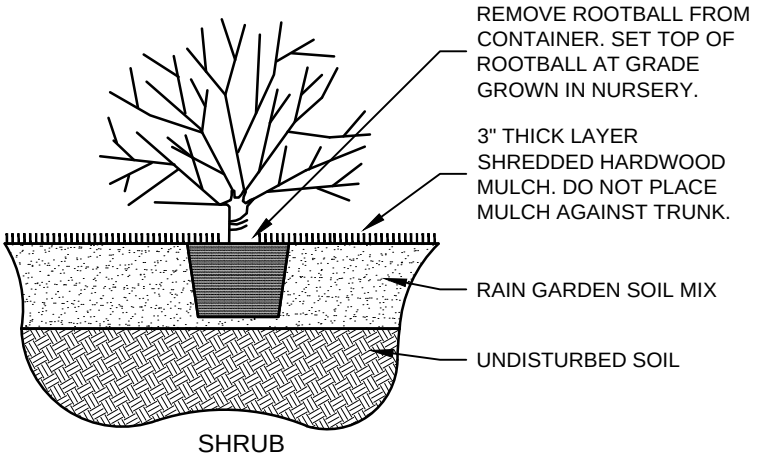

SHRUB

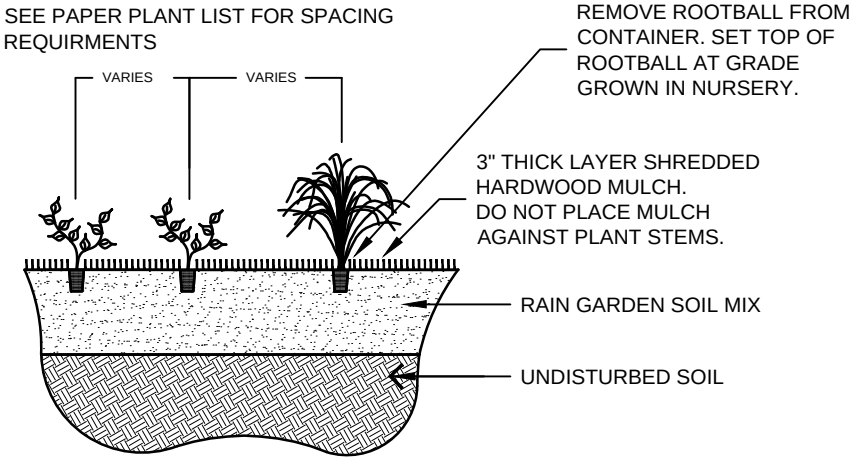

PLUG