City Utilities
Design Standards
Manual

DRIVEWAY PAVEMENT RESTORATION

Created: June 6, 2012 Revised: October 20, 2015

Scale: N.T.S.

STONE DRIVE RESTORATION

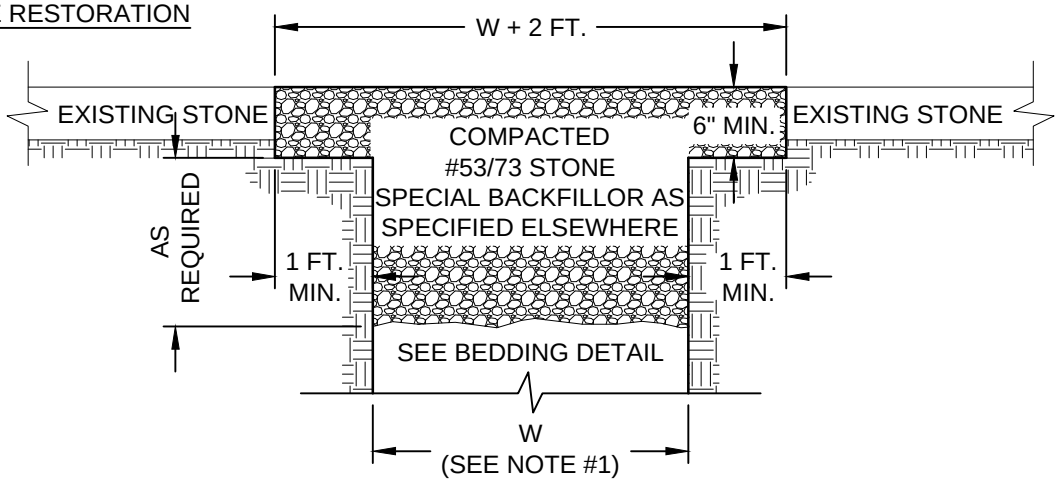

CONCRETE DRIVE RESTORATION

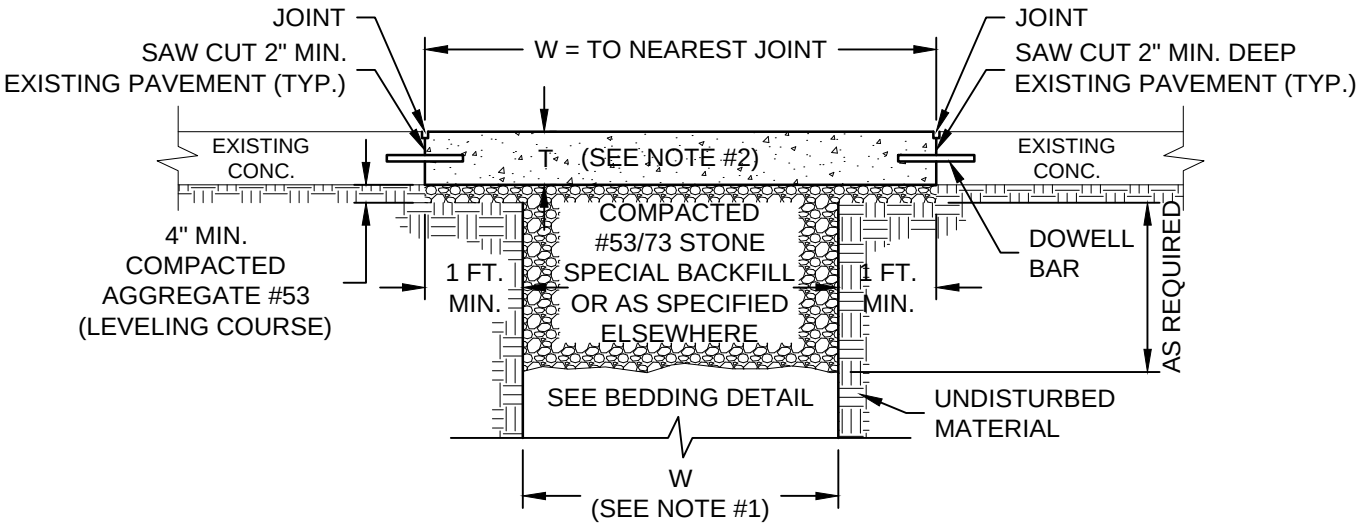

ASPHALT DRIVE RESTORATION

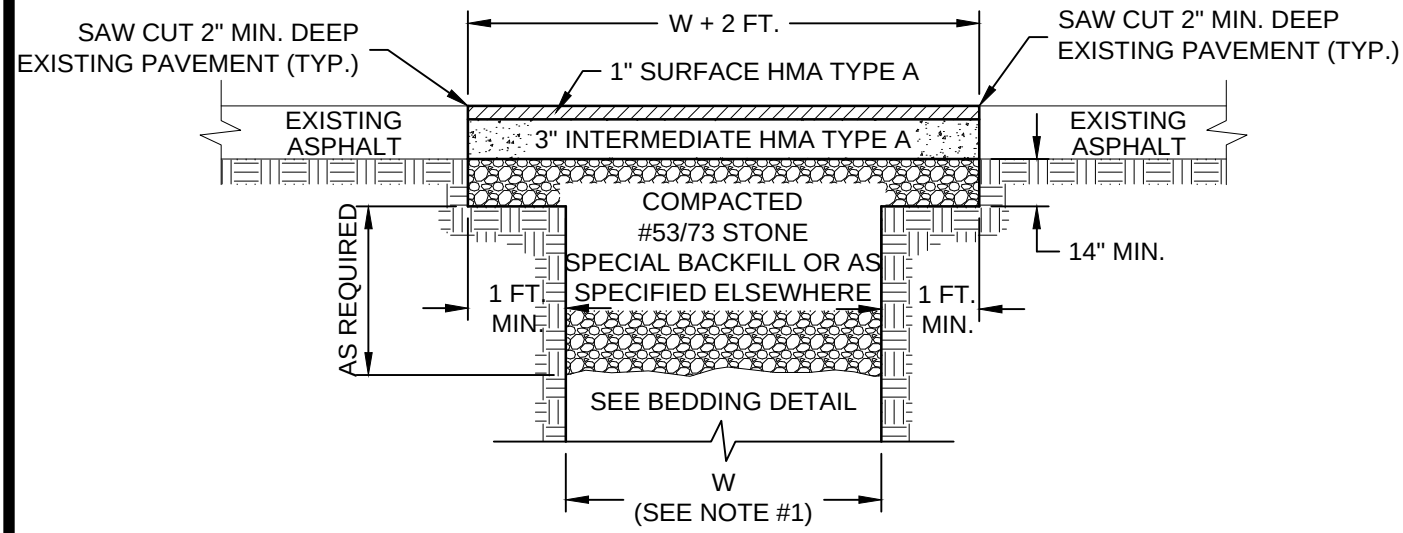

NOTES:

1. WIDTH OF TRENCH (W) SHALL EQUAL OUTSIDE DIAMETER OF PIPE + 30 INCHES.
2. COMMERCIAL DRIVEWAY T=8" AND RESIDENTIAL DRIVEWAY T=6".
3. NEW SURFACE SHALL BE SLOPED TO MATCH EXISTING PAVEMENT.